25 mm (1") Pump Maximum Flow Rate: 172 lpm (45.5 gpm)

P2 METAL

PUMP DATA

Specifications:

Ship Weight..... Aluminum 9 kg (20 lb)
Stainless Steel 17 kg (37 lb)
Air Inlet..... 6 mm (1/4")
Liquid Inlet..... 25 mm (1")
Liquid Outlet..... 19 mm (3/4")

DIMENSIONAL DRAWINGS

P2 Metal

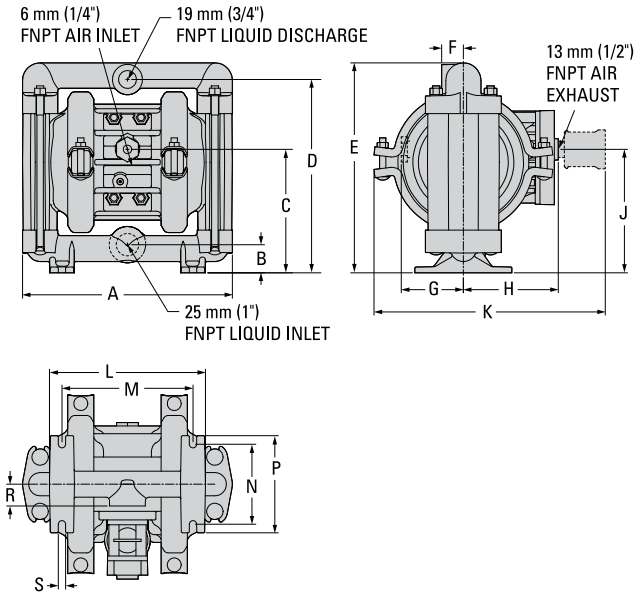

DIMENSIONS

ITEM	METRIC (mm)	STANDARD (inch)
A	274	10.8
B	38	1.5
C	163	6.4
D	254	10.0
E	274	10.8
F	28	1.1
G	81	3.2
H	124	4.9
J	163	6.4
K	302	11.9
L	203	8.0
M	173	6.8
N	104	4.1
P	127	5.0
R	28	1.1
S	10	0.4

REV. A

P2 Metal - Saniflo™ FDA

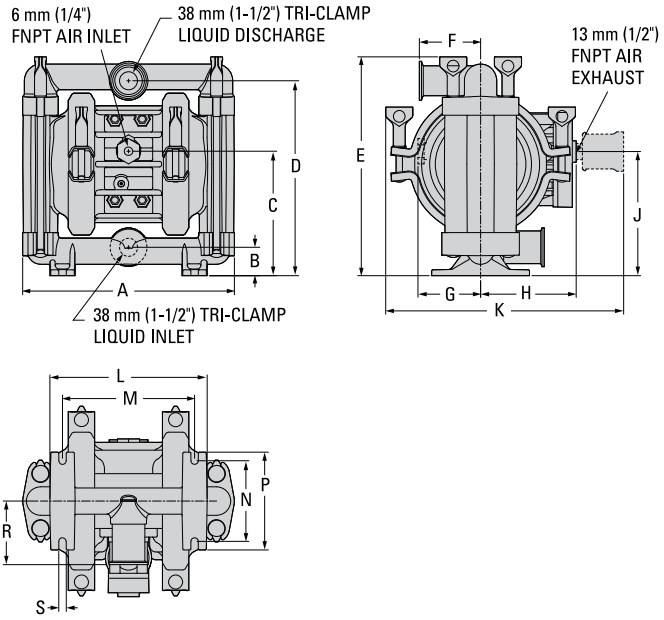

DIMENSIONS

ITEM	METRIC (mm)	STANDARD (inch)
A	274	10.8
B	38	1.5
C	163	6.4
D	254	10.0
E	284	11.2
F	79	3.1
G	81	3.2
H	124	4.9
J	160	6.3
K	310	12.2
L	203	8.0
M	173	6.8
N	104	4.1
P	127	5.0
R	84	3.3
S	10	0.4

REV. A

WILDEN®
22069 Van Buren Street
Grand Terrace, CA 92313-5607 USA
O: +1 (909) 422-1730 F: +1 (909) 783-3440
www.wildenpump.com

PERFORMANCE

P2 METAL RUBBER-FITTED

Max. Flow Rate..... 172 lpm (45.5 gpm)
Max. Inlet Pressure ..... 8.6 bar (125 psig)
Max. Size Solids.....3.2 mm (1/8")
Max. Suction Lift ..... 5.2 m Dry (17.0')
9.0 m Wet (29.5')

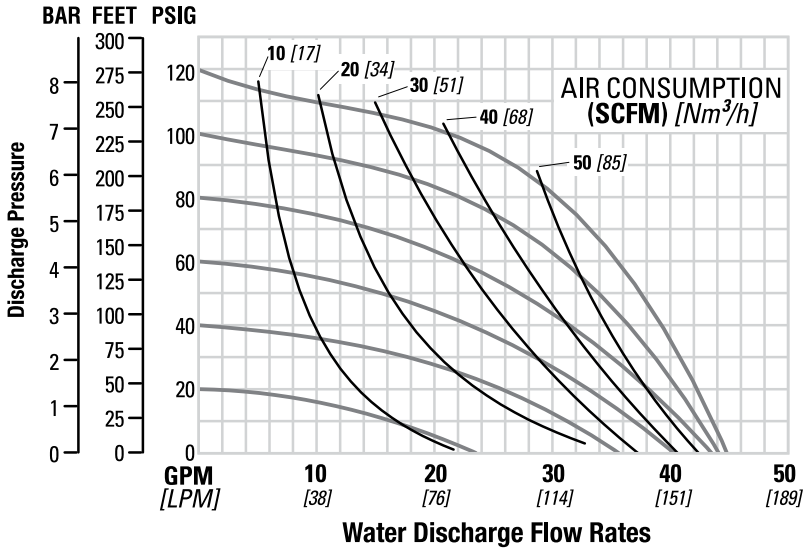

Click button to view Performance Curve → RUBBER-FITTED | TPE-FITTED

P2 METAL REDUCED-STROKE PTFE-FITTED

Max. Flow Rate..... 155 lpm (41.0 gpm)
Max. Inlet Pressure ..... 8.6 bar (125 psig)
Max. Size Solids.....3.2 mm (1/8")
Max. Suction Lift ..... 2.8 m Dry (9.1')
9.0 m Wet (29.5')

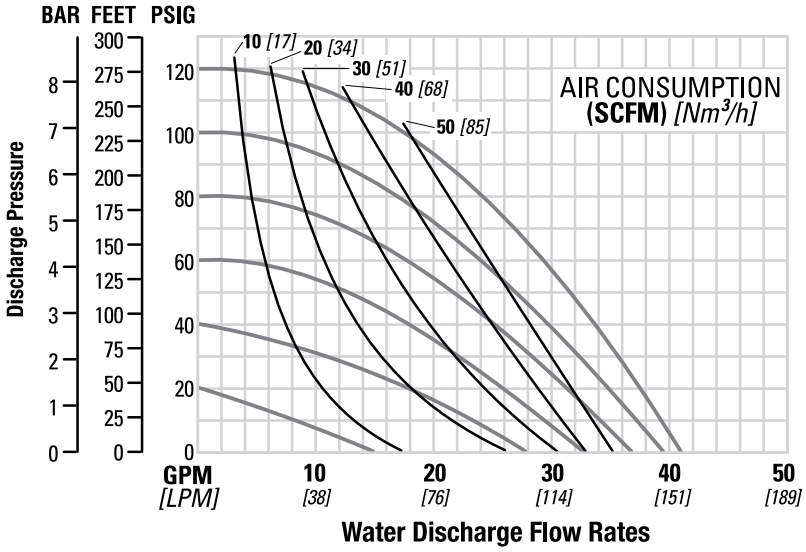

Click button to view Performance Curve → REDUCED-STROKE PTFE-FITTED | FULL-STROKE PTFE-FITTED

WILDEN®

22069 Van Buren Street
Grand Terrace, CA 92313-5607 USA

O: +1 (909) 422-1730 F: +1 (909) 783-3440
www.wildenpump.com

PSG® a DOVER company
psgdover.com