PARTS LIST
101-B08

BLACKMER PARTS LIST
PUMP MODEL: X4B

Section	101
Effective	Feb 2014
Replaces	Jan 2011

Keep with Instructions 101-B00 for Installation, Operation and Maintenance

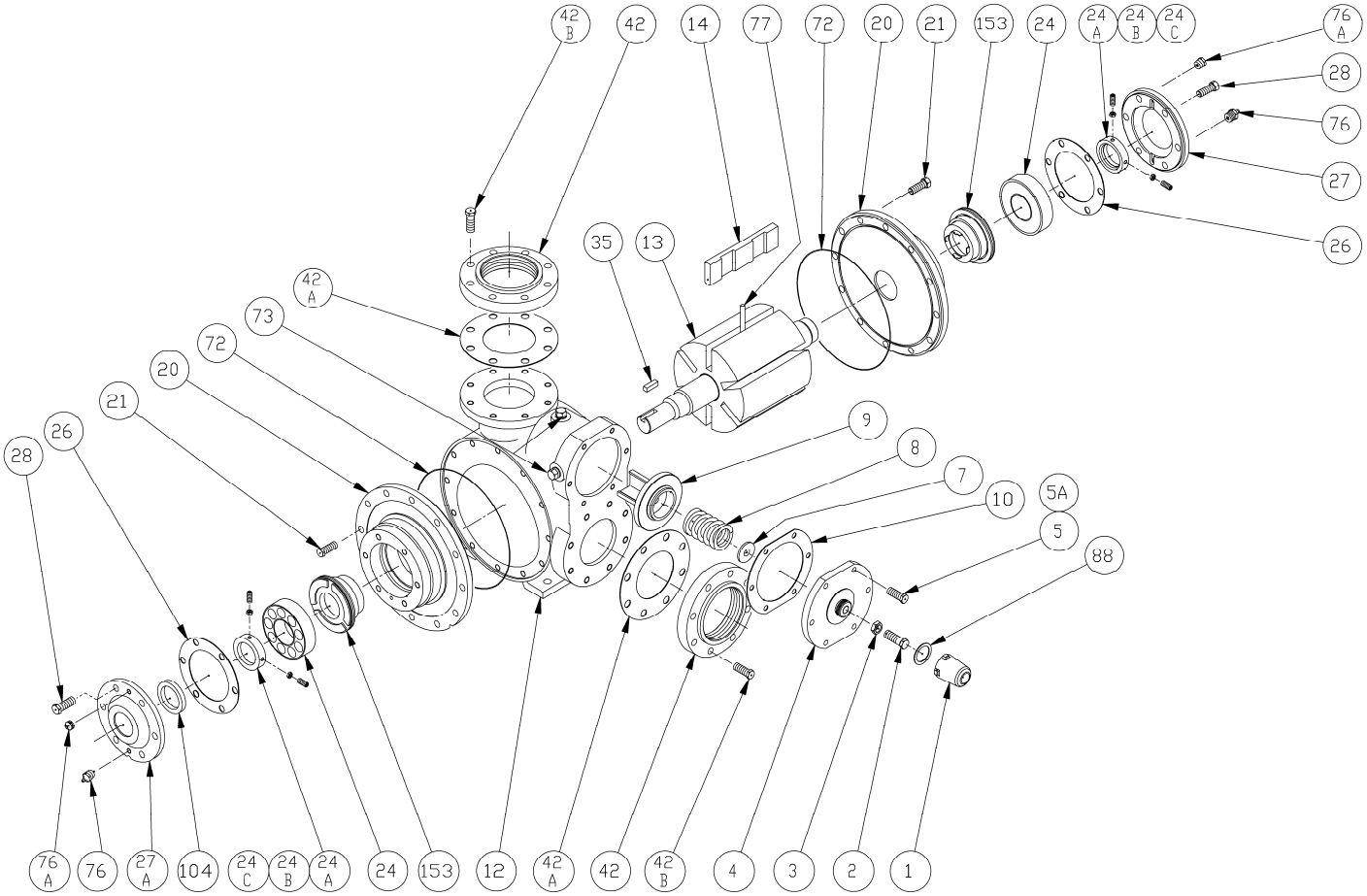

Ref. No.	Description	Parts per Pump	Part No.	Ref. No.	Description	Parts per Pump	Part No.
1	Cap - Relief Valve (R/V)	1	413957	24	Ball Bearing	2	[1] 903182
2	Adjusting Screw - R/V	1	436307	24A	Lock Collar - Bearing (with Setscrew 24B)	2	[1, 2] 721937
3	Locknut – Adjusting Screw	1	436355	24B	Setscrew	4	[1, 2] 922104
4	Cover - R/V	1	411904	24C	Jam Nut	4	[1, 2] 922923
5	Capscrew - R/V Cover	6	920351	26	Gasket - Bearing Cover	2	[1] 386950
7	Spring Guide - R/V	1	426355	27	Bearing Cover – Outboard	1	041905
8	Spring - R/V (36-50 psi)	1	476303	27A	Bearing Cover – Inboard	1	041903
	Spring - R/V (51-75 psi)		476310	28	Capscrews - Bearing Cover	12	920491
	Spring - R/V (76-110 psi)		476305	35	Key – Shaft, Square	1	[1,3] 909149
	Spring - R/V (111-125 psi)			42	Flange - 4" NPT (Std.)*	2	651900
9	Valve - R/V (Std.)	1	456315	42A	Gasket - NPT Flange (Std.)	2	[1] 381904
	Valve - R/V (Nickel Plated)		456300	42B	Capscrews - NPT Flange (Std.)	16	920532
10	Gasket - R/V Cover	1	[1] 531903	72	O-Ring - Head (FKM) (Std.)	2	[1] 702024
12	Cylinder	1	021906		O-Ring - Head (PTFE)		702093
13	Rotor & Shaft	1	261950		O-Ring - Head (Buna-N)		702023
	EC Rotor & Shaft		261944	73	Gage Plug	2	908198
14	Vane - Duravane (Std.)	6	[1] 091924	76	Grease Fitting	2	317815
	Vane - EC Cast Iron		091952	76A	Grease Relief Fitting	2	701992
	Vane - EC Laminate		091931	77	Push Rod	3	[1] 121905
20	Head	2	031908	88	Gasket - R/V Cap	1	[1] 533908
21	Capscrews - Head	24	920510	104	Grease Seal	1	[1] 904190
					Kit - Maintenance		898959

[1] Included in Maintenance Kit
[2] Earlier models of the X4B are not fitted with Bearing Lock Collars. Lock Collars may be fitted to older models.
[3] Pumps prior to April 2008 used Woodruff key 909135, included in Maintenance kits.
* See Page 2 for Weld / ANSI flange options. SS = Stainless Steel. EC = Extra-Clearance.

MECHANICAL SEALS

Ref. No.	Part Name	Parts Per Pump	Part No.
153	**Mechanical Seals Complete -** Cast Iron Stationary Seat, Carbon Seal Face, FKM O-Rings. (IVCV) **(Std.)**	2	[1] 336982
	Cast Iron Stationary Seat, PTFE O-Ring, Carbon Seal Face w/ PTFE Seal Ring. (IACT)		331973
	Stainless Steel Stationary Seat, PTFE O-Ring, Carbon Seal Face w/ PTFE Seal Ring. (WACT)		331901
	Cast Iron Stationary Seat, Carbon Seal Face, Buna-N O-Rings. (INCN)		336958
153D	O-Ring - Stationary (FKM)	2	711932
	O-Ring - Stationary (PTFE)		702090
	O-Ring - Stationary (Buna-N)		701945
153L	O-Ring - Rotating (FKM)	2	701967
	Seal Ring - Rotating (PTFE)		**
	O-Ring - Rotating (Buna-N)		701933

[1] Included in Maintenance Kit

**PTFE Rotating Seal Ring is not available as a separate part.

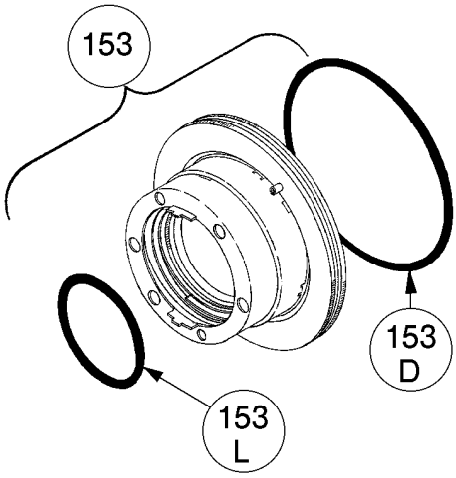

FLANGE OPTIONS

Ref. No.	Part Name	Parts Per Pump	Part No.
42	Flange - 4" Weld	2	651906
	Flange - 4" ANSI		651917
42B	Capscrews - Weld / ANSI Flange	8	920532
42C	O-Ring - Weld/ANSI Flg. (FKM)	2	702238
	O-Ring - Weld/ANSI Flg. (PTFE)		702239
	O-Ring - Weld/ANSI Flg (Buna-N)		702237

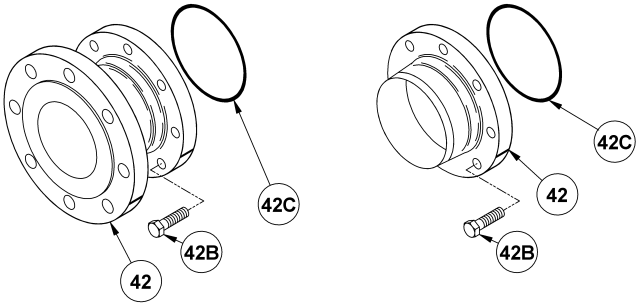

ANSI **WELD**

1809 Century Avenue, Grand Rapids, Michigan 49503-1530, U.S.A.
Telephone: (616) 241-1611 / Fax: (616) 241-3752
E-Mail: blackmer@blackmer.com / Internet: www.blackmer.com